Experimental sweep using the XR2206 function generator chip. Used in Box 51

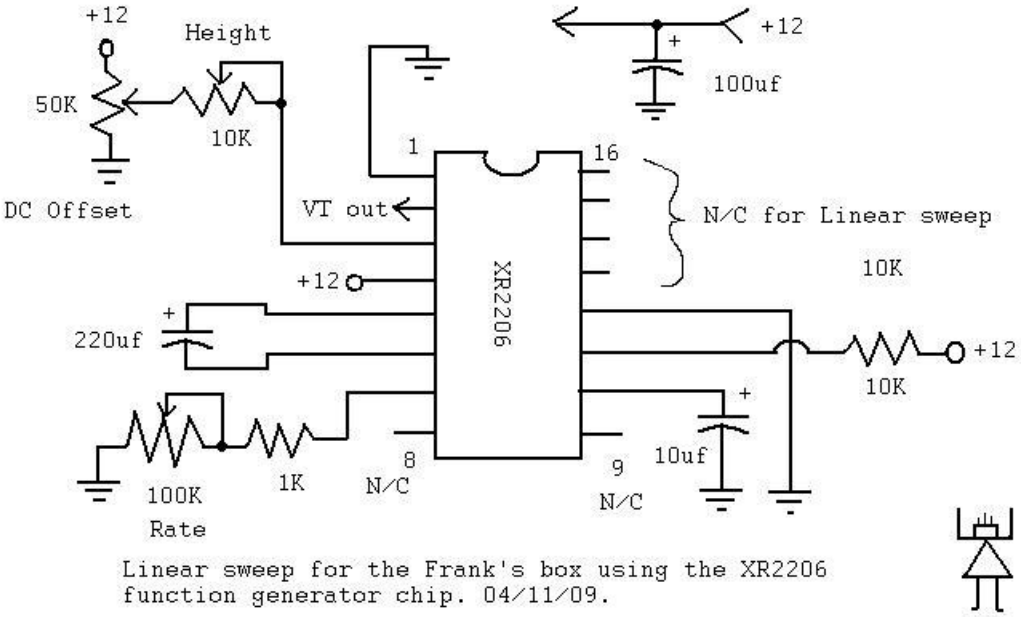

Box 51 is AC powered, or plugs into the wall for power, there are no batteries.